RoHS Compliant

CUSTOMER DRAWING

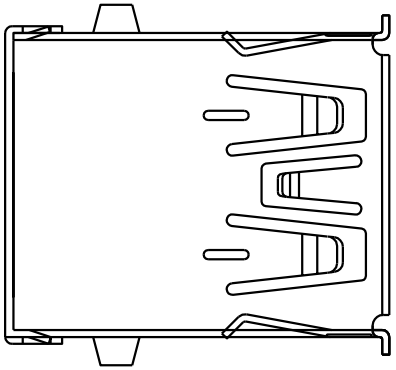

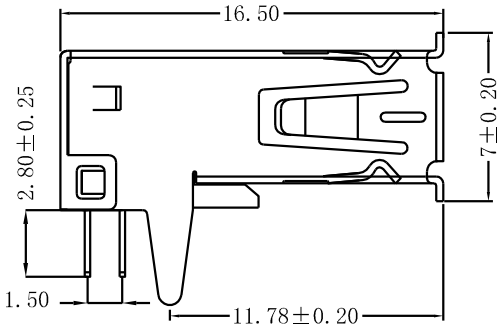

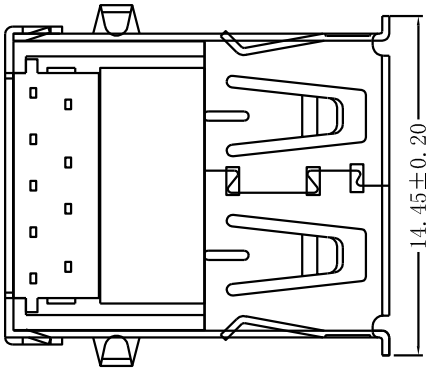

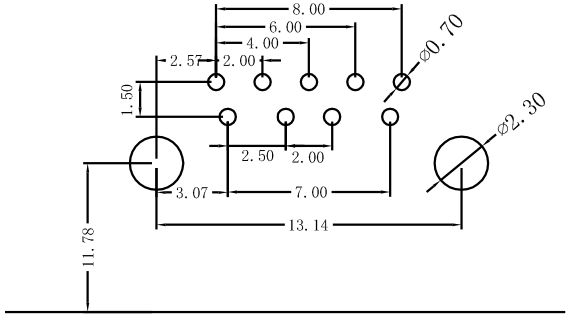

PCB Layout

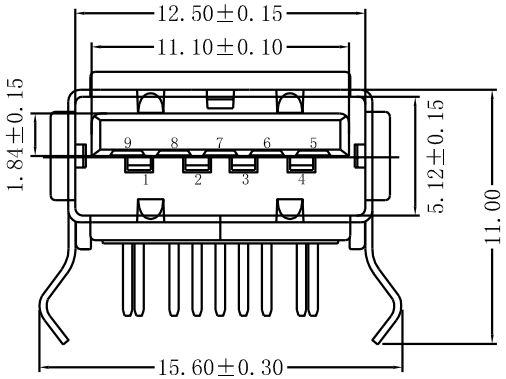

NOTE:

1. MATERIAL:
   - 1.1 INSULATOR:PBT
   - 1.2 CONTACT:BRASS(T=0.25mm)
   - 1.3 SHELL:BRASS(T=0.30mm)
2. ELECTRICAL CHARACTERISTICS;
   - 2.1 CONTACTRESISTANCE:30mΩ MAXIMUM
   - 2.2 CONTACT CURRENT RATING:1.5A
   - 2.3 DIELECTRIC WITHSTANDING VOLTAGE: 500 V R.M.S.
   - 2.4 INSULATION RESISTANCE 1000 MEGOHMS MIN
   - 2.5 OPERATING TEMPEROTURE: -40° C ～ 85° C
3 MECHANICAL CHARACTERISTICS:
   - 3.1 MATING FORCE:3.57kg MAX
   - 3.2 UNMATED FORCE:1.02kg MIN
   - 3.3 DURABILITY:MANDATORY:5,000 CYCLES
4. PLATING
   - 4.1 TERMINAL: 50u″ MIN NICKEL ALL OVER 100u″MIN Tin ON SOLDER AREA (1~30)u″Au ON CONTACT AREA
   - 4.2 SHELL:80u″MIN.NICEL ALL OVER
5. PART NO

Pin NUMBER	SIGNAL NAME
1	VBUS
2	D-
3	D+
4	GND
5	StdA_SSRX-
6	StdA_SSRX+
7	GND_DRAIN
8	StdA_SSTX-
9	StdA_SSTX+
Shell	Shield

ECN. NO	REV	DATE	DESCRIPTION	CHANGED	APPROVED
———	A	10.08.16	RELEASE	JAMES	

TOLERANCES UNLESS OTHERWISE SPECIFIED
X. ±0.30
X.X ±0.20
X.XX ±0.15
X.XXX ±0.05
ANGEL ±1°

MATERIAL:

FINISH:

DESIGN: DATE:

CHECKED: DATE:

APPROVED: DATE:

钻宝电子有限公司
Zuanbao Electronics Co.,Ltd.

TITLE: USB3.0-9WS01

PART NO:

DWG NO:

SCALE: 1:1 | UNIT: mm | SIZE: A4 | SHEET: 1/1 | REV: A